PLFY-MS-VEM2-E

4-Way Blow Ceiling Cassette

R32



PLP-6EA

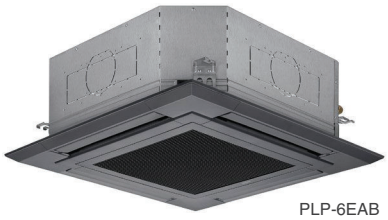

PLP-6EAB

PLFY-MS-VEM2-E INDOOR UNITS		PLFY-MS32VEM2-E	PLFY-MS40VEM2-E	PLFY-MS50VEM2-E	PLFY-MS63VEM2-E	PLFY-MS80VEM2-E	PLFY-MS100VEM2-E	PLFY-MS125VEM2-E
CAPACITY (kW)	Heating (nominal)	4.0	5.0	6.3	8.0	10.0	12.5	16.0
	Cooling (nominal)	3.6	4.5	5.6	7.1	9.0	11.2	14.0
	Heating	4.0	5.0	6.3	8.0	10.0	12.5	16.0
	Total Cooling - Hi	3.20 (3.00)	4.00 (3.50)	5.00 (4.10)	6.40 (4.90)	8.10 (6.20)	10.00 (7.60)	12.50 (9.50)
	Total Cooling - Mi1	3.16	3.88	4.86	6.22	7.82	9.74	12.01
	Total Cooling - Mi2	3.09	3.79	4.63	6.09	7.35	9.34	11.37
	Total Cooling - Lo	3.02	3.69	4.50	5.93	6.72	8.81	10.54
POWER INPUT (kW)	Heating (nominal)	0.03	0.03	0.03	0.03	0.05	0.07	0.11
	Cooling (nominal)	0.03	0.03	0.03	0.03	0.05	0.07	0.11
AIRFLOW (l/s)	Lo-Mi2-Mi1-Hi	217-233-250-267	217-233-250-283	217-233-267-300	233-250-267-300	233-283-333-383	333-383-433-483	367-433-500-583
SOUND PRESSURE LEVEL (dBA)	Lo-Mi2-Mi1-Hi	26-27-29-31	26-27-29-31	26-27-29-31	28-29-30-32	28-31-34-37	34-37-39-41	35-39-42-45
WEIGHT (kg)	(Grille)	19 (5)	19 (5)	19 (5)	21 (5)	21 (5)	24 (5)	24 (5)
DIMENSIONS (mm)	Width (Grille)	840 (950)	840 (950)	840 (950)	840 (950)	840 (950)	840 (950)	840 (950)
	Depth (Grille)	840 (950)	840 (950)	840 (950)	840 (950)	840 (950)	840 (950)	840 (950)
	Height (Grille)	258 (40)	258 (40)	258 (40)	258 (40)	258 (40)	298 (40)	298 (40)
ELECTRICAL SUPPLY		220-240v, 50Hz	220-240v, 50Hz	220-240v, 50Hz	220-240v, 50Hz	220-240v, 50Hz	220-240v, 50Hz	220-240v, 50Hz
PHASE		Single	Single	Single	Single	Single	Single	Single
RUNNING CURRENT (A)	Heating / Cooling	0.25 / 0.32	0.25 / 0.32	0.25 / 0.32	0.29 / 0.36	0.43 / 0.50	0.60 / 0.67	0.99 / 1.06
FUSE RATING (BS88) - HRC (A)		6	6	6	6	6	6	6
MAINS CABLE No. Cores		3	3	3	3	3	3	3
GRILLE MODEL REFERENCE	White	PLP-6EA	PLP-6EA	PLP-6EA	PLP-6EA	PLP-6EA	PLP-6EA	PLP-6EA
	Black Matt	PLP-6EAB	PLP-6EAB	PLP-6EAB	PLP-6EAB	PLP-6EAB	PLP-6EAB	PLP-6EAB
V BLOCKING FILTER		PAC-SK53KF-E	PAC-SK53KF-E	PAC-SK53KF-E	PAC-SK53KF-E	PAC-SK53KF-E	PAC-SK53KF-E	PAC-SK53KF-E
3D I-SEE SENSOR GRILLE		PLP-6EAE	PLP-6EAE	PLP-6EAE	PLP-6EAE	PLP-6EAE	PLP-6EAE	PLP-6EAE
SELF-ELEVATING GRILLE		PLP-6EAJ	PLP-6EAJ	PLP-6EAJ	PLP-6EAJ	PLP-6EAJ	PLP-6EAJ	PLP-6EAJ

Notes: PLFY-MS-VEM2-E units are compatible for use with PURY-(E)M-YXM-A, PUHY-M-YXM-A, PURY-(E)P-YNW-A2, PUHY-P-YNW-A2, PUMY-(S)P-V/YKM/YBM, PUMY-(S)M-V/YKM, PQRY-P-Y(S)LM-A1 & PQHY-P-Y(S)LM-A1 outdoor units only.

PLFY-MS-VEM2-E DIMENSIONS

LOWER VIEW

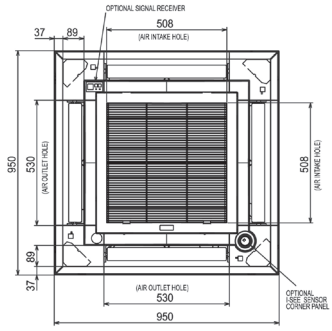

UPPER VIEW

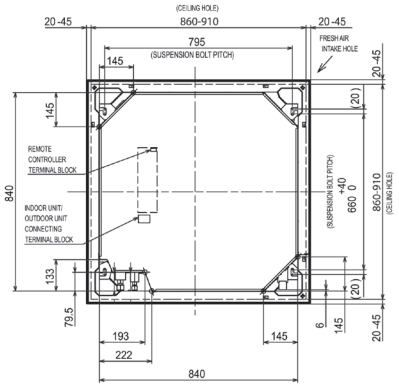

FRONT VIEW

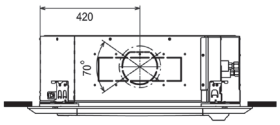

SIDE VIEW

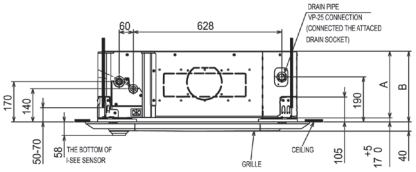

Model	A	B
PLFY-MS32,40VEM2-E	241	258
PLFY-MS50,63,80,100,125VEM2-E	281	298

PLFY-MS-VFM2-E

600x600 4-Way Blow Ceiling Cassette Indoor Unit



SLP-2FA

PLFY-MS-VFM2-E INDOOR UNITS		PLFY-MS15VFM2-E	PLFY-MS20VFM2-E	PLFY-MS25VFM2-E	PLFY-MS32VFM2-E	PLFY-MS40VFM2-E	PLFY-MS50VFM2-E
CAPACITY (kW)	Heating (nominal)	1.9	2.5	3.2	4.0	5.0	6.3
	Cooling (nominal)	1.7	2.2	2.8	3.6	4.5	5.6
	Heating	1.9	2.5	3.2	4.0	5.0	6.3
	Total Cooling - Hi (Sensible)	1.50 (1.30)	2.00 (1.60)	2.50 (2.00)	3.20 (2.40)	4.00 (2.90)	5.00 (3.60)
	Total Cooling - Mi	1.48	1.94	2.43	3.06	3.78	4.78
	Total Cooling - Lo	1.41	1.84	2.24	2.91	3.51	4.41
POWER INPUT (kW)	Heating (nominal)	0.02	0.02	0.02	0.02	0.03	0.04
	Cooling (nominal)	0.02	0.02	0.02	0.02	0.03	0.04
AIRFLOW (l/s) Cooling	Lo-Mi-Hi	108-125-133	108-125-142	108-133-150	117-133-158	125-150-183	150-183-217
SOUND PRESSURE LEVEL (dBA)	Lo-Mi-Hi	26-28-30	26-29-31	26-30-33	26-30-34	28-33-39	33-39-43
WEIGHT (kg)	(Grille)	13 (3)	13 (3)	13 (3)	14 (3)	14 (3)	14 (3)
DIMENSIONS (mm)	Width (Grille)	570 (625)	570 (625)	570 (625)	570 (625)	570 (625)	570 (625)
	Depth (Grille)	570 (625)	570 (625)	570 (625)	570 (625)	570 (625)	570 (625)
	Height (Grille)	208 (10)	208 (10)	208 (10)	208 (10)	208 (10)	208 (10)
ELECTRICAL SUPPLY		220-240v, 50Hz	220-240v, 50Hz	220-240v, 50Hz	220-240v, 50Hz	220-240v, 50Hz	220-240v, 50Hz
PHASE		Single	Single	Single	Single	Single	Single
RUNNING CURRENT (A)	Heating / Cooling	0.16 / 0.21	0.17 / 0.22	0.18 / 0.23	0.19 / 0.24	0.23 / 0.28	0.35 / 0.40
FUSE RATING (BS88) - HRC (A)		6	6	6	6	6	6
MAINS CABLE No. Cores		3	3	3	3	3	3
GRILLE MODEL REFERENCE	White	SLP-2FA	SLP-2FA	SLP-2FA	SLP-2FA	SLP-2FA	SLP-2FA
	Black Satin	SLP-2FA-B	SLP-2FA-B	SLP-2FA-B	SLP-2FA-B	SLP-2FA-B	SLP-2FA-B
V BLOCKING FILTER		PAC-SK54KF-E	PAC-SK54KF-E	PAC-SK54KF-E	PAC-SK54KF-E	PAC-SK54KF-E	PAC-SK54KF-E
3D I-SEE SENSOR GRILLE		SLP-2FAE	SLP-2FAE	SLP-2FAE	SLP-2FAE	SLP-2FAE	SLP-2FAE

Notes: PLFY-MS-VFM2-E units are compatible for use with PURY-(E)M-YXM-A, PUHY-M-YXM-A, PURY-(E)P-YNW-A2, PUHY-P-YNW-A2, PUMY-(S)P-V/YKM/YBM, PUMY-(S)M-VKM/YKM, PQRY-P-Y(S)LM-A1 & PQHY-P-Y(S)LM-A1 outdoor units only.

PLFY-MS15/20/25/32/40/50VFM2-E DIMENSIONS

LOWER VIEW

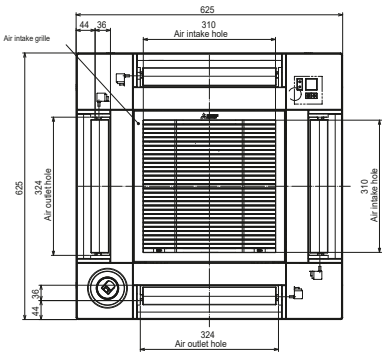

UPPER VIEW

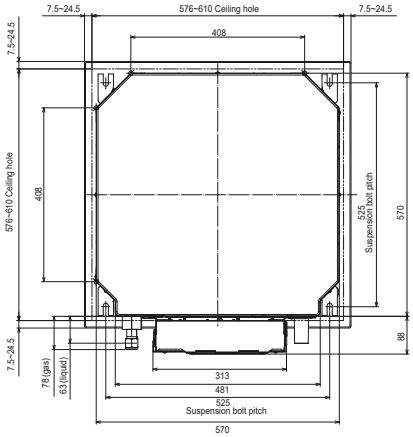

SIDE VIEW

